TOYO-INTL®

CHAIN BLOCK

- All structural parts made of high quality steel.
- Alloy steel hooks.
- Gear made of alloy steel.
- Strong nut.
- Hollow structure increases strength.
- Casting safety latchesl.
- All Major components are strictly heat-treated.
- Load chain made by GERMAN machine.
- Emboss logo.
- Galvanized plate.

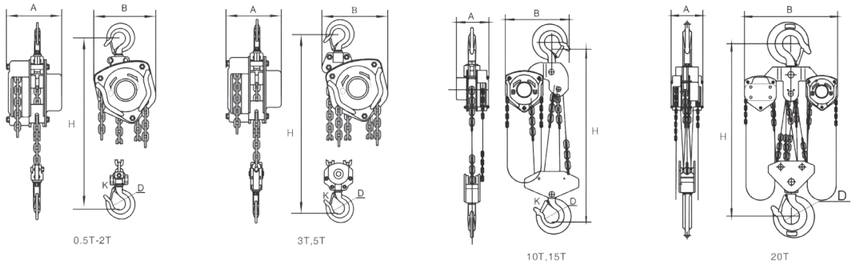

ModeL :VT

SPECIFICATION

Model	Capacity (t)	Standard Lift (m)	Running test(t)	Effort required to lift max load(n)	No.of falls of load chain	Load chain diameter(mm)	Dimensions(mm)				Net weight (kg)	Packing (L*W*H)(cm)
							A	B	D	H		
VT-0.5T	0.5	2.5	0.5	350	1	5	126	145	28	285	8.4	22*14*15
VT-1T	1	2.5	1	330	1	6.3	151	159	32	315	12	25*19*16
VT-1.5T	1.5	2.5	1.5	348	1	7.1	151	178	36	340	16.2	33*24*16
VT-2T	2	3	2	365	1	8	183	205	36	380	20	33*24*19
VT-3T	3	3	3	360	2	7.1	151	208	46	475	24	34.5*24*16
VT-5T	5	3	5	410	2	9	183	264	46	600	41	40*30*19
VT-10T	10	3	10	410	4	9	188	398	57	720	79	48*42*18.5
VT-15T	15	3	15	435	6	9	190	580	75	870	120	69*56*20
VT-20T	20	3	20	435*2	8	9	192	630	82	890	193	78*68*20
VT-30T	30	3	30	435*2	12	9	330	670	106	1000	220	85*67*30
VT-50T	50	3	50	435*2	22	9	410	900	130	1950	1092	110*100*130

FEATURES

ModeL :VT

Special heat treated hook, will never broken even under overload situation.

Embossed Logo and Capacity for permanent identification.

High strength alloy steel gears with special heat treatment to increase the strength.

Special pitch length, match hand wheel very well saving pulling force and no block during chain moving.

Pin type chain stop, easy disassembled Casting chain stop is optional.

High strength G80 Alloy Steel Load Chain.

Special hook tip design, prevent latch slip out of hook, more safety.

DOUBLE PAWL SPRING MECHANISM TO FURTHER INCREASE SAFETY
In case on pawl spring is damaged, the other maintains functions. This mechanism further increases safety.

LOAD CHAIN GUIDE MECHANISM
Machined load wheel providing better match. Chain guide mechanism in flanged load sheave and guide roller facilitate smooth movement of load chain.

TOYO-INTL®

CHAIN BLOCK

- Experience exceptional durability thanks to all-steel construction featuring rugged gear case enclosure and hand wheel cover.
- Enjoy increased lifting height thanks to low headroom.
- Compact design results in lightweight and easy portability.
- Minimize manual effort thanks to efficient drive train.
- Standard slip clutch device prevents the hoist from being used to lift damaging loads beyond rated capacity.
- Double pawl springs provide redundancy for reliable operation of brake mechanism.
- Get reliable braking with double enclosed brake cover that keeps out dust, rain, and dirt.

ModeL :VD

Tail ring holder

Overload Protection Device

Casting guide wheel

Sealed roller bearings

G80 Chain

Safety Hook

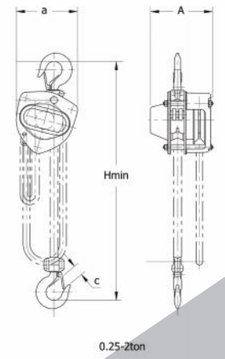

0.25-2ton

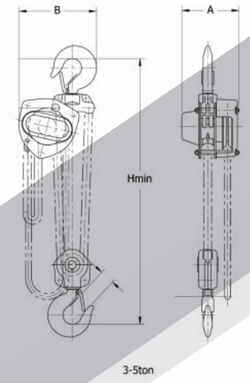

3-5ton

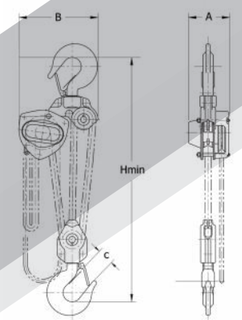

10ton

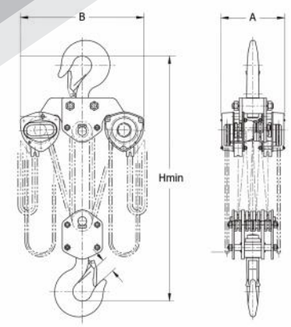

20-30ton

ModeL :VD

Specifications:

Model		VD-0.25T	VD-0.5T(MINI)	VD-0.5T	VD-1T	VD-1.5T	VD-2T	VD-3TS	VD-3T	VD-5T	VD-10T	VD-20T
W.L.L(kg)		250	500	500	1000	1500	2000	3000	3000	5000	10000	20000
Lift(m)		2.5	2	2.5	2.5	2.5	2.5	3	3	3	3	3
Load Chain	Falls	1	1	1	1	1	1	1	2	2	4	8
	Size	4x12	5x15	5x15	6x18	7.1x21	8x24	10x30	7.1x21	9x27	9x27	9x27
Hand Force(N)		220	250	240	250	265	335	363	265	360	380	380x2
N.W(kg)		3.8	6.5	11	12.5	17.8	19.5	29	23.5	41.3	78.5	193
Dimensions	A(mm)	102	125	132	151	173	175	176	173	189	189	189
	B(mm)	106	116	148	172	196	210	230	226	280	463	630
	C(mm)	21	30	28	32	36	36	46	46	46	57	82
	Hmin(mm)	260	310	345	376	442	470	565	490	688	765	890
Packing Size(cm)		20x15x12	22x15x15	24x19x18	28x21x21	34x26x20	34x26x20	41x32x24	34x26x20	41x32x24	48x42x18.5	78x68x20

TOYO-INTL®

CHAIN BLOCK

- Compact Design, Low Headroom - Wide Usage.
- High Precision CNC Gears.
- Impact Resistance Gear Cover.
- High Endurance Rollers on Load Sprocket.
- Double Pawl Brake System.
- Dust Cover on Brake System.
- Engineering Optimized Hand Chain Wheel Cover- Preventing Hand Chain Stack in Fast Operation.
- High Precision Double CNC Load Chain Guides.
- Zinc Plated Stay Bolts, Side Plates & Load Chain Guides.
- Robust - Higher than 1500 cycles EN 13157 Endurance Testing

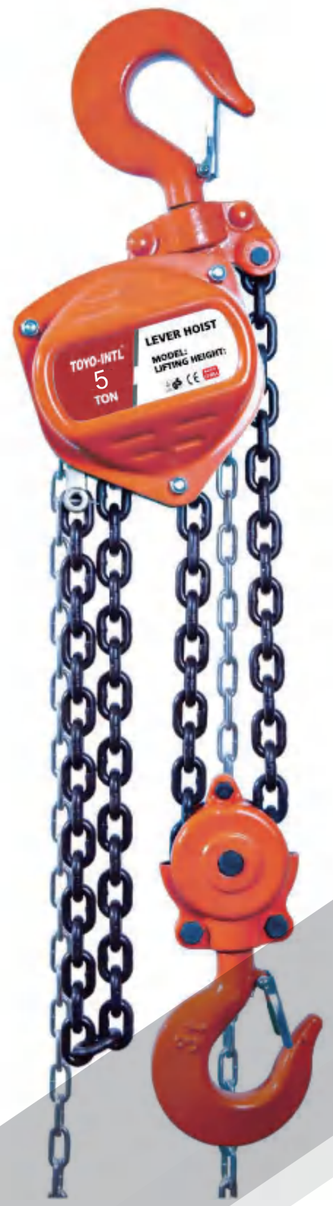

ModeL :VJ

Gear Cover

Wheel Cover

Chain Guides

Zinc Plated Stay Bolts

Load sprocker

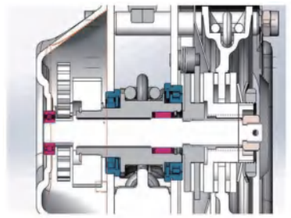

01.4 Caged Bearings Premium Upgrading.

02.Thrust Bearings on Bottom Hook.

03.Zinc Plated Load Chain.

4.Over Load Protection (OLP)Direct Shifting to non-OLP Version.

5.Type-A Gear Cover Apperance Option.

6.High Precision Caged Roller Bearings.

7.Zinc Plated Cast Safety Latch.

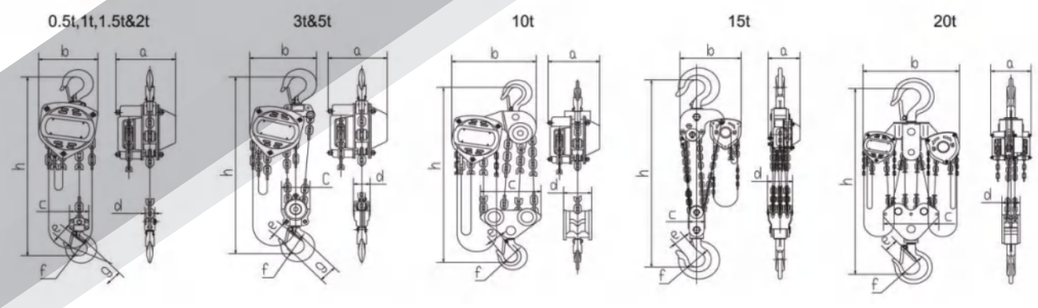

Specifications:

Capacity		(tonnes)	0.25	0.5	1	1.5	2	2	3	5	10	15	20
Purchasing Ref.			VJ025	VJ050	VJ100	VJ150	VJ20	VJ200S	VJ300	VJ500	VJ1000	VJ1500	VJ2000
No. of Falls			1	1	1	1	2	1	2	2	4	6	8
Load Chain		(mm)	4 x 12	5 x 15	6 x 18	8 x 24	6 x 18	8 x 24	8 x 24	10 x 30	10 x 30	10 x 30	10 x 30
Pull to Rated Load		(N)	200	240	370	490	425	440	490	510	470	470	470x2
Proof Load		(tonnes)	0.38	0.75	1.5	2.25	3.0	3.0	4.5	7.5	15	22.5	30
Hand Chain		(mm)	3 x 15 x 10.5	5 x 25 x 17									
Standard Lift		(m)	3	3	3	3	3	3	3	3	5	5	5
Net Weight		(kg)	4.35	7.8	11.1	15.8	15.14	16.8	24.2	39.8	89.7	91.1	197
Extra Wt. per m		(kg)	0.37	1.38	1.62	2.23	3.24	2.23	3.62	5.18	9.52	13.86	19.03
Dimensions	a	(mm)	102	125	134	151	134	157	157	180	180	210	225
	b	(mm)	106	130	155	173	185	185	235	262	365	406	550
	c	(mm)	29.5	43	51	64	80	64	100	126	260	110	286
	d	(mm)	21	25	30	34	55	34	56	74	98	168	123
	e	(mm)	27	27	33	33.5	37	37	43.5	51	64	80	82
	f	(mm)	32	32	40	42	46	46	52	60	85	100	110
	g	(mm)	35	35	45	47	52	52	62.5	79	-	-	-
	h	(mm)	250	280	306	368	450	445	520	600	760	1,000	1,150

TOYO-INTL®

ALUMINUM HAND CHAIN HOIST

- Suspension devices and load-bearing hooks are made of anti-aging and high strength alloy steel. In case of overloading, deformation will occur first and not suddenly break.
- The hook is equipped with a secure safety latch which can rotate 360 degree freely.
- Enclosed design protects internal components.
- Excellence in engineering led to the development of the world's smallest industrial hoist—the MNAC. This uniquely compact and lightweight manual hoist is the perfect solution for light loads in high or difficult-to-reach places.
- The MNAC comes standard with an advanced design load limiter that prevents the hoist from being used to lift damaging loads beyond rated capacity.
- The MNAC gives you a unique combination of portability and extreme durability with its lightweight, die-cast aluminum housing. Take this little hoist with you everywherefor the small jobs that require big dependability.

ModeL :MNAC

Safety Hook

light weight aluminum shell

G80 Chain

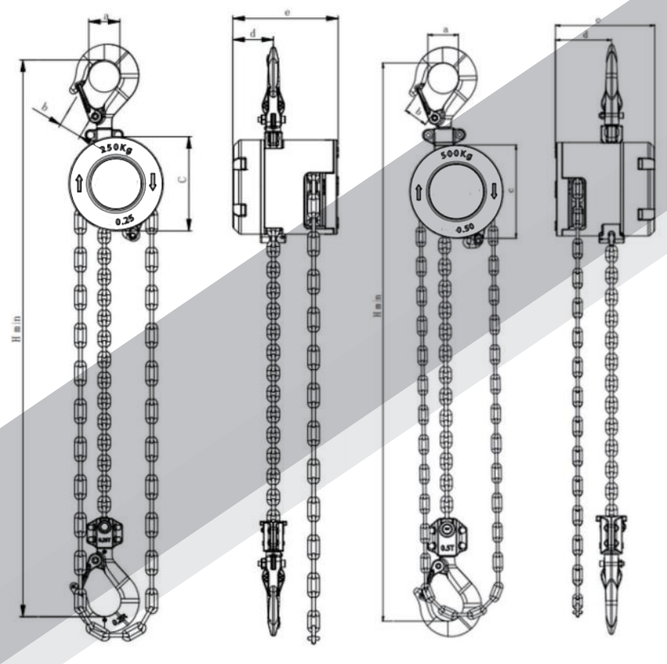

0.25t 0.5t

ModeL:MNAC

Specifications:

Model	unit	MNAC025	MNAC050
Standard lifting height	(m)	2.5	2.5
Chain fall		1	1
Full load force	(N)	210	230
Test load	(kg)	375	750
Load chain size	(mm)	3.2X9	4X12
Hand chain size	(mm)	3X16.5	3X16.5
Net weight	(kg)	2.4	3.9
Packing weight	(kg)	2.7	4.2
Packing dimensions	(cm)	18x11x11	23.5x13.5x12
Weight of per lift meter	(kg/m)	0.23	0.341
Hand chain weight per lift meter	(kg/m)	0.34	0.34
Dimensions（mm）	a	27	34
	b	20	22
	c	82	104
	d	45	63
	e	102	101
	Hmin	233	307

TOYO-INTL®

CHAIN BLOCK

- Light weight robust construction;
- Low effort to lift maximum load;
- Fully forged hooks;
- Fully machines lift wheel;
- ISO high grade alloy chain;
- Zinc plated hand chain as standard;
- Double cover protection;
- Durable baked enamel paint protection;
- Overload protection device available upon request.

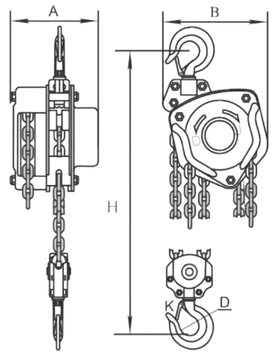

Overload Protection Device

Sealed Roller Bearings

Ratchet disk

Unique Curled Edge

ModeL :VB

SPECIFICATION

Model		VB-0.5	VB-1	VB-1.5	VB-2	VB-3	VB-5	VB-10	VB-20	VB-30	VB-50
Capacity	load(t)	0.5	1	1.5	2	3	5	10	20	30	50
Standard	lift(m)	2.5	2.5	2.5	3	3	3	3	3	3	3
Running	testload(kn)	7.5	15	22.5	3	4.5	7.5	15	30	45	70
Effort required to lift max.load(N)		200(20.5)	320(32.5)	360(36.5)	365(37)	385(39)	435(44.3)	435(44.3)	435x2 (44.3x2)	435x2 (44.3x2)	435x2 (44.3x2)
Load chain diameter number of falls(mm)		6.0x1	6.0x1	8.0x1	8.0x1	8.0x2	10.0x2	10.0x4	10.0x8	10.0x12	10.0x22
The distance of hand chain pulling when lifting height go up 1meter (mm)		32	40	72	72	144	158	316	636x2	948x2	1738x2
Net weight(kg)		8.4	11	16.2	18.5	25.6	42.8	79.5	193	220	1092
Extra weight meter of extra lift(kg)		1.7	1.7	2.3	2.3	3.7	5.6	9.7	19.4	26.4	48.4
Dimensions(mm)	A	131	140	161	161	161	186	207	215	350	406
	B	127	158	187	187	210	253	398	650	680	962
	C	270	317	399	414	465	636	798	890	1380	2578
	D	35	40	45	50	58	64	85	110	110	170
	K	30	34	38	41	48	52	64	85	85	130
Packing measurement (L*W*H)(cm)		22x15x19.5	23x18x19.5	28x21x24	28x21x24	32x21x26	40x21x21	64x21x21	64x38x64	72x50x68	110x100x130

JAPAN INSPECTED

CHAIN HOIST

- Superior Grade 100 load chain-WAFIOS link, Din standard.
- Forged and heat treated load hooks with batch traceability and stretchindicators.
- Doubl pawls supporting fail-safe brake mechanismEven if by any chance one of the two pawls becomes unserviceable, theother will still remain operative, and the brake system remains secure.
- Asbestos free brake linings.
- Forged safety latch with manufacture.
- Individually proof load tested to 1.5xWLLwith individual serial number. Light weight yet durableSteel frame construction is rugged yet light weight and easy to handle.

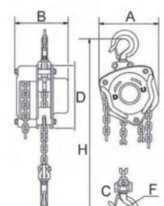

ModeL :CK

SPECIFICATION

Product Code	Capacity (t)	Standard Lift(m)	Test Load (t)	Pulling Efforts (kg)	Chain Fall No.	Load Chain Dia.(mm)	Dimensions(mm) A	B	C	D	Net weight (kg)
CK005	0.5	3.0	0.75	22	1	6	125	111	24	134	8.1
CK010	1.0	3.0	1.50	31	1	6	147	126	28	154	11.2
CK015	1.5	3.0	2.25	35	1	8	183	141	34	192	15.3
CK020	2.0	3.0	3.00	30	1	8	215	163	38	224	17.1
CK030	3.0	3.0	4.50	35	2	8	183	141	38	192	18.0
CK050	5.0	3.0	7.50	39	2	10	215	163	48	224	21.7
CK100	10.0	3.0	12.50	41	4	10	360	163	64	224	65.2
CK200	20.0	5.0	25.00	41x2	8	10	585	191	82	224	194.0
CK300	30.0	5.0	37.50	47x2	12	10	705	485	75	285	458.0

TOYO-INTL®

LEVER HOIST

- All steel construction.
- Compact design.
- Double pawl braking system.
- Fully forged hooks.
- Long - lasting powder coating protection.
- High standard G80 load chain (black or galvanized).

Grip ring | Retaining Plate assembly | brakering | change | Safety Stop knob

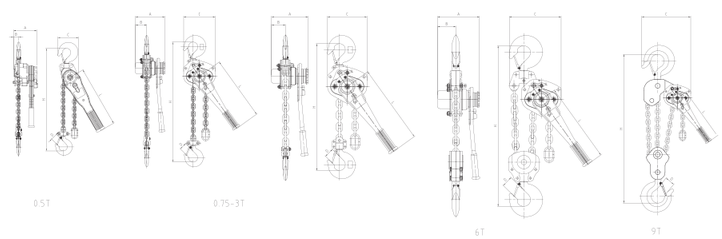

ModeL :VL

SPECIFICATION

MODEL	Load Capacity(t)	Standard Lift(m)	Running Test(t)	Effort required to lift max load (N)	Load Chain		Lifting Motor						Net Weight (kg)	Packing (L*W*H) (cm)	Extra weight meter of extra lift (kg)
					Chain Fall Number	Diameter (mm)	H	A	B	C	D	L			
VL0.5	0.5	1.5	0.75	330	1	5	270	105	24	85	31	265	3.5	33.5x12.5x9	0.55
VL0.75	0.75	1.5	1.125	230	1	6.3	303	150	55	128	32	254	6.6	34x12x17	0.88
VL1	1	1.5	1.5	250	1	6.3	303	150	55	128	32	254	6.6	34x12x17	0.88
VL1.5	1.5	1.5	2.25	295	1	7.1	365	165	64	149	36	366	11	45x16x18	1.12
VL2	2	1.5	3	315	1	7.1	365	165	64	149	36	366	11	45x16x18	1.12
VL3	3	1.5	4.5	414	1	9	485	195	85	182	46	366	17	47x20x21	1.78
VL6	6	1.5	9	430	2	9	600	195	85	240	46	366	27.5	47x20x21	3.74
VL9	9	1.5	13.5	430	3	9	700	195	85	335	57	366	47	62x48.5x26	5.61

LEVER HOIST

- The adoption of low-alloy structural steel plate， safe， reliable and durable.
- G80 high strength load chain， high safety factor and long service life.
- Steady rotation， high efficiency， mall lever force.
- Products certified by CE and GS.
- Double pawl keep safe and reliable.
- The products have been widely used in nuclear power，thermal power transmission and transmission etc.
- Optional overload protection.

Stamping Handwheel | Overload Protection Handwheel | Overload Protection Device

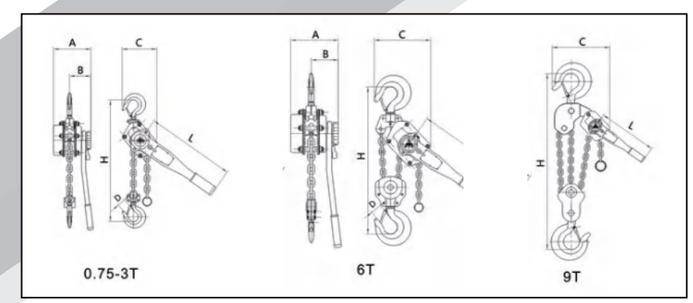

ModeL :VAJ

SPECIFICATIONS

Model	Capacity (t)	Standard Lift (m)	Running test(t)	Effort required to lift max load(n)	No.of falls of load chain	Load chain diameter(mm)	Dimensions(mm)						Net weight (kg)	Packing (L*W*H)(cm)
							A	B	C	D	L	H		
VAJ-0.5T	0.5	1.5	0.75	140	1	5	102	80	95	32	290	320	3.5	33.5*12.5*9
VAJ-0.75T	0.75	1.5	1.125	140	1	6	148	87.5	135	32	290	320	7	37*14*17
VAJ-1T	1	1.5	1.5	140	1	6	148	88	135	32	290	320	7.5	37*14*17
VAJ-1.5T	1.5	1.5	2.25	240	1	8	175	102	157	36	415	380	11	52*14*18
VAJ-2T	2	1.5	3	240	1	8	176	102	155	36	415	380	11.5	52*14*18
VAJ-3T	3	1.5	4.5	320	1	10	195	109	210	45	415	480	19	55*16*21
VAJ-5T	5	1.5	7.5	340	2	10	195	109	253	45	415	600	32	55*16*21
VAJ-9T	9	1.5	11.25	360	3	10	195	109	319	57	415	700	47	62*48.5*26

TOYO-INTL®

LEVER HOIST

- Suspension devices and load-bearing hooks are made of anti-agingand high strength alloy steel. In case of over-loading,the deformationwill take place first and not suddenly break.
- The hook is equipped with a secure safety latch, which can rotate 360 degree freely.
- The ergonomic handle makes the hoist easy to operate.
- The enclosed design protects the internals from contami-nation.
- All components of the disc load brake are made of high-quality materials and are corrosion-resistant.
- The enclosed design protects the internals from contami-nation.
- The chain block is made of aluminum alloy and is not easy to rust.

G80 load chain

Aluminum alloy hook

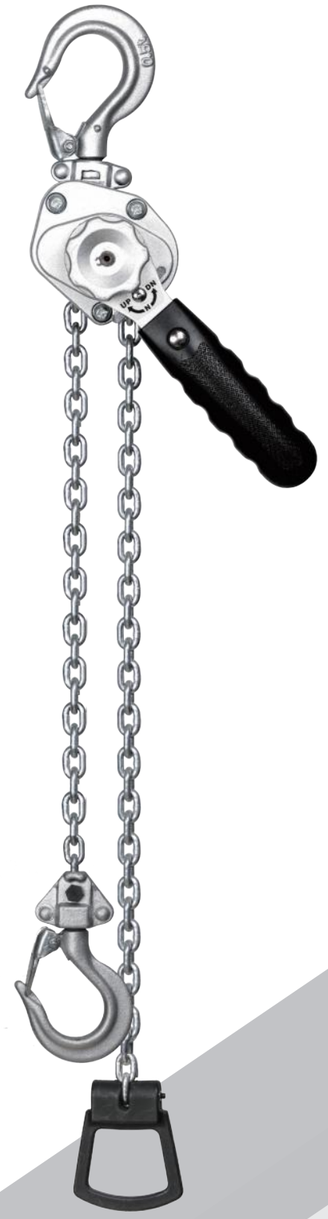

ModeL :ALB

Guide roller system

Flexible handle

MINI LEVER HOIST

HSH Lever Hoist is an efficient and versatile lifting tool.
Superior Grade 100load chain-chrome plated. Forged and heat treated load hooks with batch trace ablity and stretch indicators. Double pawls brake system.

MINI HSH Specification				
Capacity(kg)		250	500	750
Standard lift(m)		1.5	1.5	1.5
Test load(kg)		375	750	1125
Hand-pull to lift(n)		260	260	200
Extra weight for one meter chain added(kg/m)		0.346	0.346	0.541
Load chain(dia.Xpitch)(mm)		Φ4x12	Φ4x12	Φ5x15
	A	62	70	92
	B	158	194	230
	C	156	156	232
Dimensions(mm)	D	30	35	38
	E	84	105	136
	F	240	300	350
	G	96	116	128
	H	77	79	84
N.W./G.W.(kg)		2.15/2.2	3.1/3.2	4.75/4.85

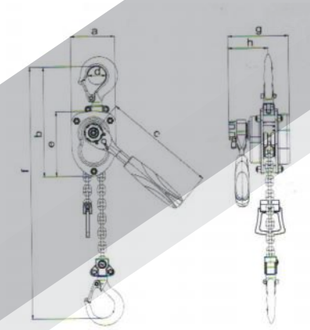

ModeL :HSH

ALB ALUMINIUM LEVER BLOCK

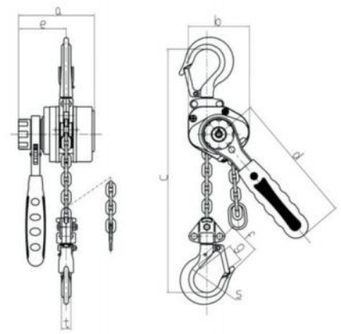

Specifications:

Model	Capacity (t)	Standard lift (m)	Running test load (t)	No.of falls of load chain	Load chain diameter (mm)	Dimension(mm)									Net weight (kg)
						A	B	C	D	E	F	G	S	T	
ALB 0.25T	0.25	1	0.375	1	3.2	87	68	200	145	55.5	35.5	21	32	11	1.5
ALB 0.5T	0.5	1.5	0.75	1	4.3	100.5	81	250	160	62.5	42	24.5	34.5	12	2.5
ALB 0.75T	0.75	1.5	1.125	1	5	105	92	260	180	64	42	28.5	35.5	14	3.4
ALB 1.5T	1.5	1.5	2.25	1	7.1	122	109	330	220	68.5	52	35	42.5	21.5	6.3

TOYO-INTL®

LEVER HOIST

ModeL :LBP

- All-steel construction featuring, rugged gear case and hand wheel, exceptional durability.
- Reinlorce double pawl brake system and lager dia. pawl springs ensure reliable brake.
- Unique curling design-This leature enables the hand chain to successlully feed directly into the wheel sprock-et from many directions and angles.
- G80 heat treated alloy load chain.
- Forged alloy Steel Hooks-Industrial rated hooks rotate 360 degrees for easy rigging. Hooks slowly stretch to indicate an overload situation increasing jobsite safety.
- Sealed roller bearings-Greatly improving performance and serve life of the product.
- Certification-Load tested to 150% of capacity with certif-icate.

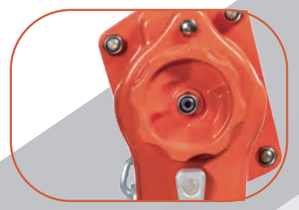

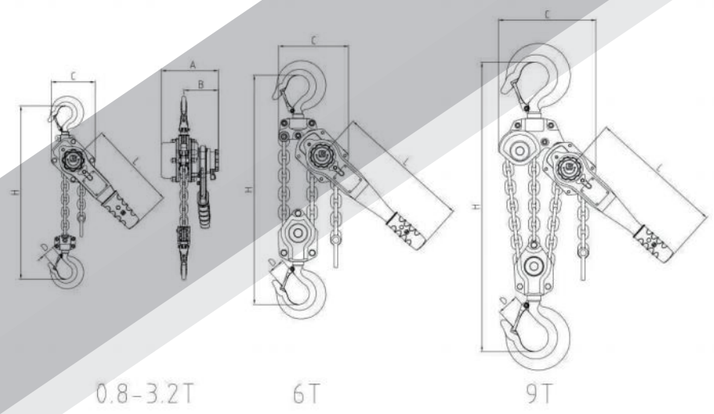

ModeL :LBG

Technical Parameters

LBG(LBP) Specifications Sheet

Model	W.L.L(t)	LIFT(m)	Proof Load(t)	Lever Force kg(n) (ibs)	Load Chain		Dimensions(mm)						N.W. (kg)	Additional Weight Per Lift(kg)
					Falls	Size	H	A	B	C	D	L	kg	
LBG(LBP) 0.8	0.8	1.5	1.2	22(215)(48)	1	5.6x15.7	300	150	100	119	24	245	6.3	0.7
LBG (LBP) 1	1	1.5	1.5	30(294)(66)	1	5.6x15.7	300	150	100	119	24	245	6.3	0.7
LBG (LBP) 1.6	1.6	1.5	2.4	31(304)(68)	1	7.1x19.9	350	168	104	126	32	265	8.5	1.1
LBG (LBP) 3.2	3.2	1.5	4.8	38(372)(84)	1	10x28	395	201	118	159	35	415	14.2	2.3
LBG (LBP) 6.3	6.3	1.5	9.5	39(382)(86)	2	10x28	540	201	118	218	44	415	26	4.6
LBG (LBP) 9	9	1.5	13.5	40(392)(88)	3	10x28	680	201	118	298	60	415	40	6.9